PIPE SIZE (NOMINAL)	DIMENSIONS A IN. MM.	DIMENSIONS B IN. MM.	WEIGHT COVER LB. KG.	WEIGHT DRY LB. KG.	WEIGHT WET LB. KG.	PART NUMBER
4L" (100mm)	8 / 203	55 / 1397	438 / 199	805 / 366	998 / 453	259604L0063
6" (150mm)	8 / 203	58 / 1473	438 / 199	869 / 395	1081 / 491	25960600063
8" (200mm)	8 / 203	58 / 1473	438 / 199	901 / 409	1129 / 513	25960800063

NO.	PART NAME	MATERIAL
1	BODY	A126 GRADE B
2	COVER	A126 GRADE B
3	CENPELLER SUPPORT	316 STAINLESS STEEL
4	STRAINING ELEMENT	316 STAINLESS STEEL
5	BACKWASH ARM–SHAFT	316 STAINLESS STEEL
6	VENT	BRASS
7	idL™ HOUSING	316 STAINLESS STEEL
8	INNER SEAL	BUNA–N
9	OUTER SEAL	BUNA–N
10	GIRTH O–RING	BUNA–N
11	ELEMENT O–RING	BUNA–N
12	LOWER BUSHING	COMPOSITE
13	SHAFT WASHER	NYLON
14	SHAFT GASKET	BUNA–N
15	UPPER BUSHING RING	TEFLON
16	UPPER BUSHING	COMPOSITE
17	SHAFT SEAL RINGS	BUNA–N
18	GEAR REDUCER	CAST IRON

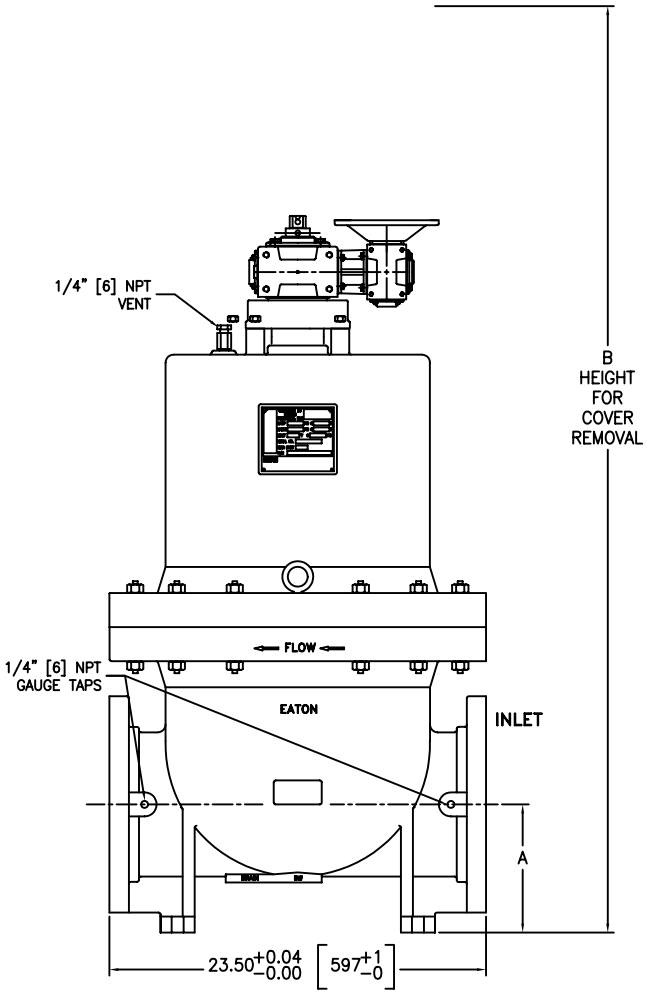

FRONT VIEW

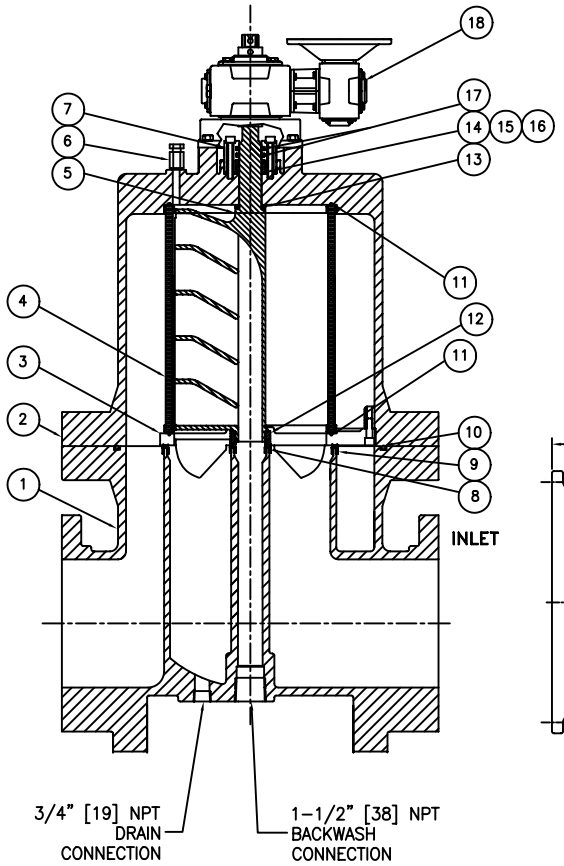

SECTIONAL VIEW

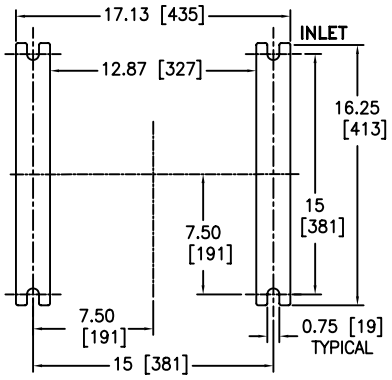

MOUNTING ARRANGEMENT

NOTES:

1. ALL FLANGE CONNECTIONS PER ASME/ANSI B16.1.
2. FOR REPLACEMENT PARTS, MODEL NO., SIZE AND SERIAL NUMBER FROM THE STRAINER NAMEPLATE MUST BE FURNISHED.
3. DESIGN PRESSURE: 200 PSI @ 150° F [13.8 BAR @ 65.5° C]

CERTIFIED FOR:
P.O. NO.:
REG. NO.:
QUOTE NO.:
TAG NO.:
NUMBER OF UNITS:
STRAINING ELEMENT:

EATON FILTRATION, LLC
900 FAIRMOUNT AVENUE, ELIZABETH, NEW JERSEY 07207

NAME: MODEL 2596 AUTOMATIC STRAINER PN16 FLANGE CAST IRON SIZES 4L" (100mm) THROUGH 8" (200mm)

DRAWN	DATE	CERT.	DATE
FM	6/8/07	LH	6/8/07

SIZE	DWG NO	REV
B	SD2596C5	A

ELECTRONIC FILE NAME: SD2596C5.DWG
REF. ECR E524 DATE 6/8/07

UNAUTHORIZED USE, MANUFACTURE OR REPRODUCTION IN WHOLE OR IN PART IS PROHIBITED. DRAWING, DESIGN AND OTHER DISCLOSURES PROPERTY OF EATON FILTRATION, LLC

REV 5/01