ITEM NUMBER	VESSEL CODE	BAG SIZE	A IN. / MM	B IN. / MM	C IN. / MM	D IN. / MM	E IN. / MM	F IN. / MM	G IN. / MM	FLOW RATE GPM (MAX)	WEIGHT LBS / KGS
SBL102S43AS0BSP0	FBF2-0102-BB10-030A-I	02	7.08 / 180	33.78 / 858	40.41 / 1026	12.15 / 309	66.50/ 1689	19.10 / 485	7.68 / 195	180	79 / 35.9

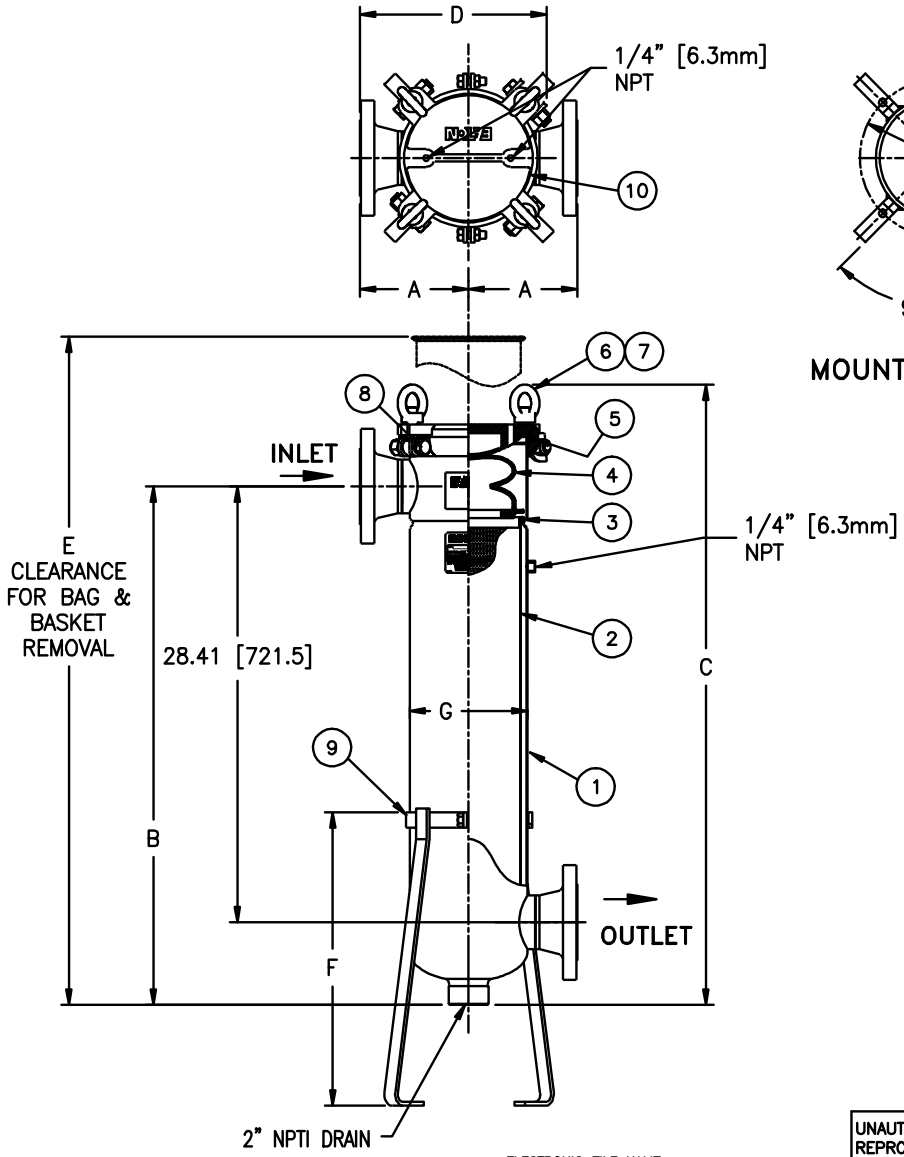

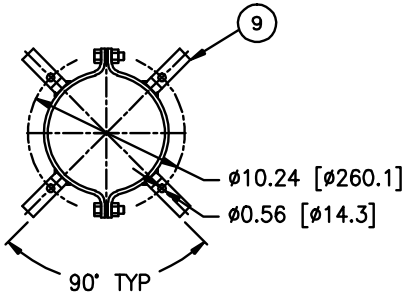

MOUNTING DETAIL

NO.	PART NAME	MATERIAL
1	BODY	304 STAINLESS STEEL
2	RESTRAINER BASKET	316 STAINLESS STEEL
3	BASKET O-RING	BUNA-N
4	BAG HOLD DOWN	KYNAR PVDF
5	O-RING	BUNA-N
6	EYE BOLT	STEEL, ZINC PLATED
7	EYE NUT	STEEL, ZINC PLATED
8	BOLT	STEEL, ZINC PLATED
9	LEGS	CARBON STEEL
10	COVER	304 STAINLESS STEEL

NOTES:

1. INLET/OUTLET FLANGED CONNECTIONS PER ANSI B16.5
2. MAWP: 150 PSI @ 250° F (10.3 BAR @ 121.1° C) MDMT: -20° F @ 150 PSI (-28.9° C @ 10.3 BAR)
3. MAXIMUM OPERATING TEMP. 250° F (121.1° C)

CERTFIED FOR:
P.O. NO.:
SALES ORDER NO.:
QUANTITY:
TAG NO.:
FILTER BAG:

EATON FILTRATION, LLC
70 WOOD AVENUE SOUTH, ISELIN, NEW JERSEY 08830

NAME: FLOWLINE II FILTER VESSEL
3" 150# FLANGED CONNECTION
STAINLESS STEEL-304

DRAWN	DATE	CERT.	DATE
MAQ	02/10/10		

SIZE	DWG NO	REV
A	FBF202XSF-3I-304	A

ELECTRONIC FILE NAME: FBF202XSF-3I-304.dwg

REF. ECR	DATE
	02/10/10

UNAUTHORIZED USE, MANUFACTURE OR REPRODUCTION IN WHOLE OR IN PART IS PROHIBITED. DRAWING, DESIGN AND OTHER DISCLOSURES PROPERTY OF EATON FILTRATION, LLC