ITEM NUMBER	BAG SIZE	A IN. / MM	B IN. / MM	C IN. / MM	D IN. / MM	E IN. / MM	F IN. / MM	G IN. / MM	H IN. / MM	WEIGHT LBS / KGS
F3AVFB00302	02	6-11/16 / 170	34-5/16 / 871.5	40-7/8 / 1038	11-3/4 / 298.4	69/ 1752.6	19-1/4 / 489	7-11/16 / 195	28-7/16 / 722.3	53 / 24

REVISIONS				
REV	DESCRIPTION	BY	ECO	DATE
C	UPDATED DRAWING	FJM	0087853	07/30/13

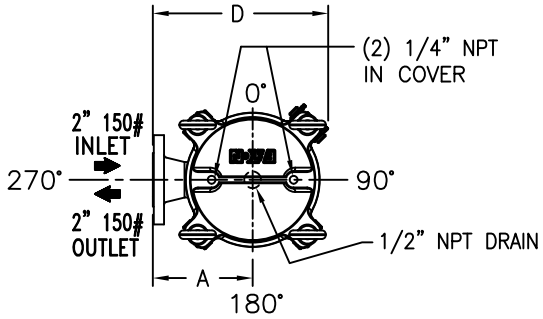

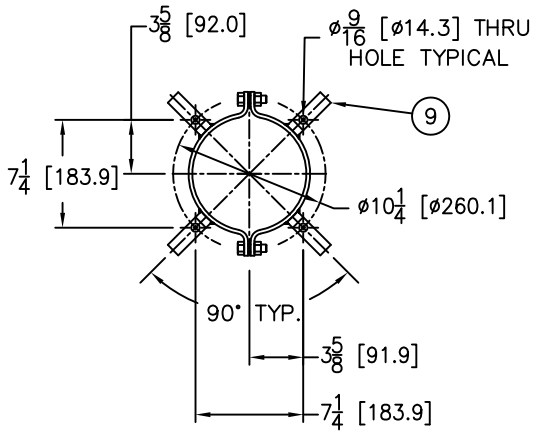

MOUNTING DETAIL

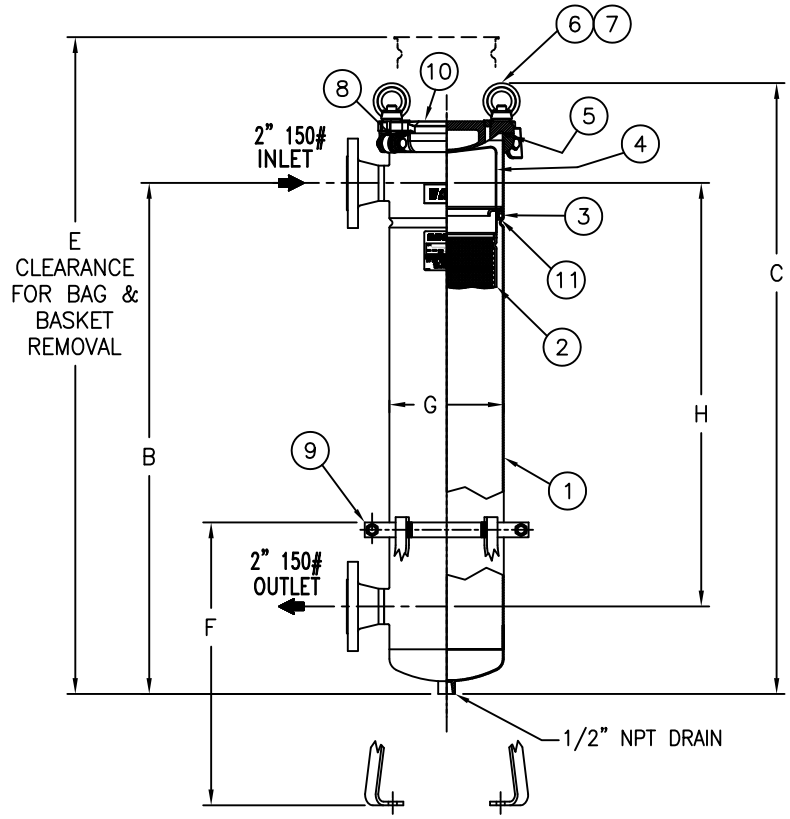

NO.	PART NAME	MATERIAL
1	BODY	CARBON STEEL
2	RESTRAINER BASKET 02 SIZE P/N L0001753	316 STAINLESS STEEL
3	ADAPTOR O-RING P/N X811441	BUNA-N
4	BAG HOLD DOWN	316 STAINLESS STEEL
5	O-RING P/N X811445	BUNA-N
6	EYE BOLT	STEEL, ZINC PLATED
7	EYE NUT	STEEL, ZINC PLATED
8	PIN	STAINLESS STEEL
9	ADJUSTABLE LEGS P/N L0002939SA-CSTL	CARBON STEEL EPOXY COATED
10	COVER	CARBON STEEL
11	ADAPTOR PLATE	316 STAINLESS STEEL

NOTES:

1. INLET/OUTLET FLANGED CONNECTIONS PER ANSI B16.5
2. MAWP: 150 PSI @ 250° F (10.3 BAR @ 121.1° C) MDMT: -20° F @ 150 PSI (-28.9° C @ 10.3 BAR)
3. MAXIMUM OPERATING TEMP. 400° F (204.4° C) WITH VITON O-RING.
4. DIMENSIONS SHOWN IN [ ] ARE IN MILLIMETERS AND FOR REFERENCE ONLY. ACCEPTANCE OF THIS PART WILL BE BASED ON "INCH" UNITS & TOLERANCES ONLY.
5. PAINT CARBON STEEL PER EATON STANDARD ES-301.

TOLERANCES (UNLESS OTHERWISE SPECIFIED)	
DECIMAL:	.X ± .030 .XX ± .010 .XXX ± .005
FRACTIONAL:	± 1/16
NOZZLE ℄ TO FLOOR:	1/8" < 4' > 1/4"
FACE TO FACE:	1/8" < 4' > 1/4"
ANGULAR:	± 1°
FLANGES (H/V):	± 1/2°
VESSEL OVERALL HT:	1"

BOLT HOLES MUST STRADDLE ℄ MACHINED PARTS TO BE FREE OF BURRS FOR ADDITIONAL TOLERANCE DETAILS REF. ES-211, ES-222 AND ES-223

REVIEWED FOR CLASSIFICATION PER PR-4
C CRITICAL S SIGNIFICANT

CUSTOMER INFO	
NAME	
P.O. NO.	
S.O. NO.	
QUANTITY	
PART NO.	F3AVFB00302

VESSEL CODE: FBF-0102-CS10-020A-NL-B-NCS

DRAWN BY	FJM
SCALE	AS DRAWN
RESTRICTION	RESTRICTION
SHEET	1 OF 1
PROJECTION	THIRD ANGLE

EATON FILTRATION, LLC
DESIGN CENTER
TINTON FALLS, NEW JERSEY, USA • PORTAGE, MICHIGAN, USA

TITLE
FLOWLINE (FBF) BAG FILTER VESSEL
2" 150# FLANGED IN/OUT CONNECTIONS
LOOP CARBON STEEL W/BUNA O-RINGS

DATE	SIZE	DWG FILENAME	REV
08/06/04	A	FBF02XCF-SSO	C

EATON CORPORATION – CONFIDENTIAL AND PROPRIETARY NOTICE TO PERSONS RECEIVING THIS DRAWING AND/OR TECHNICAL INFORMATION
THIS DOCUMENT, INCLUDING THE DRAWING AND INFORMATION CONTAINED THEREON IS CONFIDENTIAL AND IS THE EXCLUSIVE PROPERTY OF EATON AT ANY TIME. BY TAKING THE POSSESSION OF THIS DOCUMENT THE RECIPIENT ACKNOWLEDGES AND AGREES THAT THIS DOCUMENT CANNOT BE USED IN ANY MANNER ADVERSE TO THE INTEREST OF EATON AND THAT NO PORTION OF THIS DRAWING MAY BE COPIED OR OTHERWISE REPRODUCED WITHOUT THE PRIOR WRITTEN CONSENT OF EATON, IN THE CASE OF CONFLICTION CONTRACTUAL PROVISIONS, THIS NOTICE SHALL GOVERN THE STATUS OF THIS DOCUMENT.
2013 EATON CORPORATION – ALL RIGHTS RESERVED.